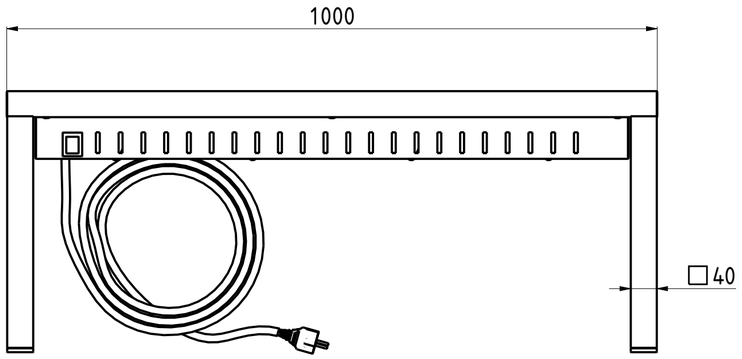

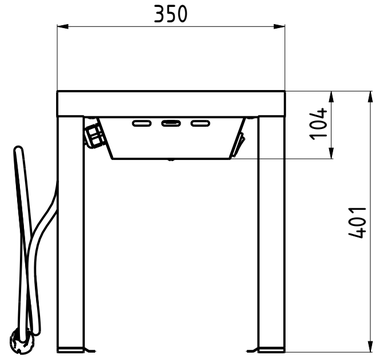

FRONT VIEW 3:20

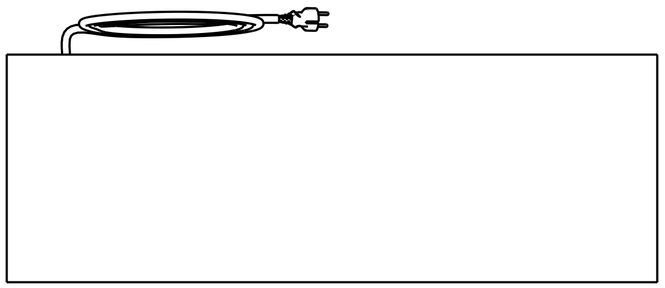

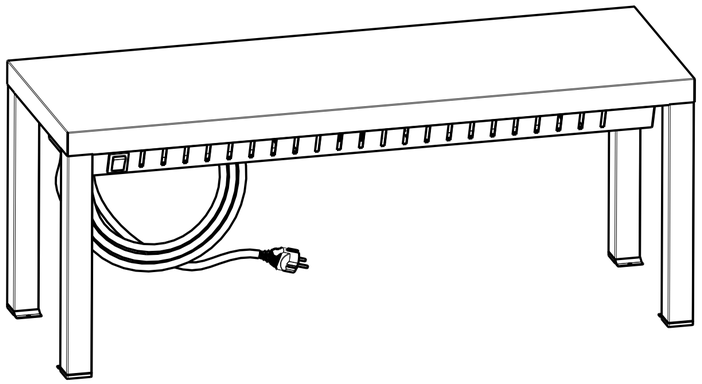

SCALA 3:20

DATA DATE	MODIF.N. MODIF.NO.	DESCRIZIONE MODIFICHE MODIFICATION DESCRIPTION	DISEGNATO DRAWN BY	APPROVATO APPROVED

MODELLO MODEL	RIPIANO DI APPOGGIO SINGOLO RISCALDATO SU GAMBE QUADRE 100x35x40 GH SINGLE TOP WITH HEATING ON SQUARE LEGS 100x35x40 GH	DISEGNO N. DRAWING NO. DSRASR10354GH	SCALA SCALE -
PARTICOLARE DETAIL	SCHEDA TECNICA DATA SHEET	DISEGNATO DRAWN BY M.PAPI	DATA DATE -
MATERIALE MATERIAL	SPESS. THICK.	APPROVATO APPROVED	SHEET 1 OF 1
FINITURA FINISH	PEZZI N. PIECES NO.	SOSTITUISCE IL DIS. N. IT REPLACES DRAWING NO.	ULTIMA EMISS. LAST EDITION
TRATTAMENTO TREATMENT	COLORE COLOUR	SOSTITUITO DAL DIS. N. REPLACED BY DRAWING NO.	

RISTOPRO
PROFESSIONAL CATERING EQUIPMENT

RISTOPRO SRL
FRAZ. BORGO TUFICO, 47 FABRIANO (AN)
ITALY +39.732.043494
WWW.RISTOPRO.COM

mm

FORM.A-2

ELABORATO CON SISTEMA CAD
DESIGNED BY CAD SYSTEM

XX QUOTA PRIMARIA
PRIMARY DIMENSION

ANGOLI Angles ±0°30'

QUOTE SENZA TOLLERANZA TOLLERANCE UNLESS OTHERWISE STATED

LUNGH. E DIAM. LENGHT AND DIAM.	0-5	5-10	10-18	18-30	30-50	50-80	80-120	120-180	180-250	250-315	315-400	400-500	>500
	±0.10	±0.15	±0.20	±0.25	±0.30	±0.35	±0.40	±0.45	±0.50	±0.55	±0.60	±0.65	±0.75