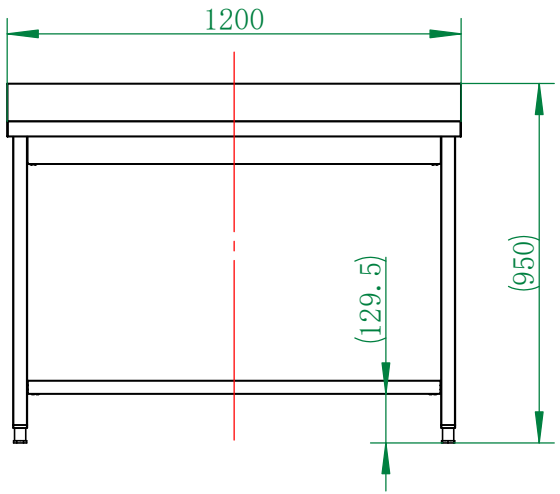

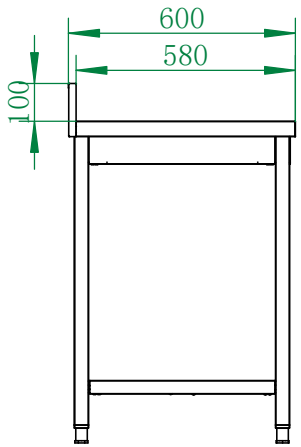

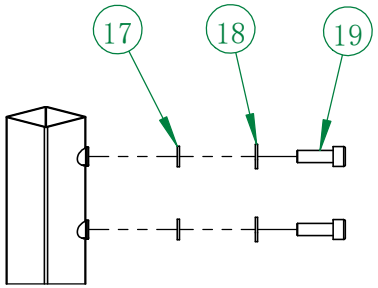

I
1 : 5

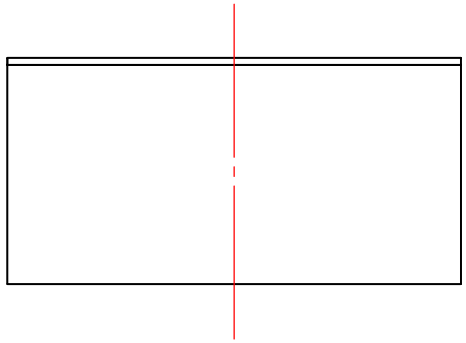

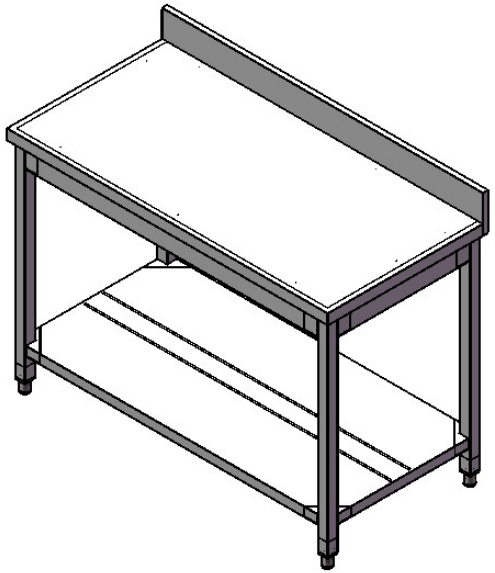

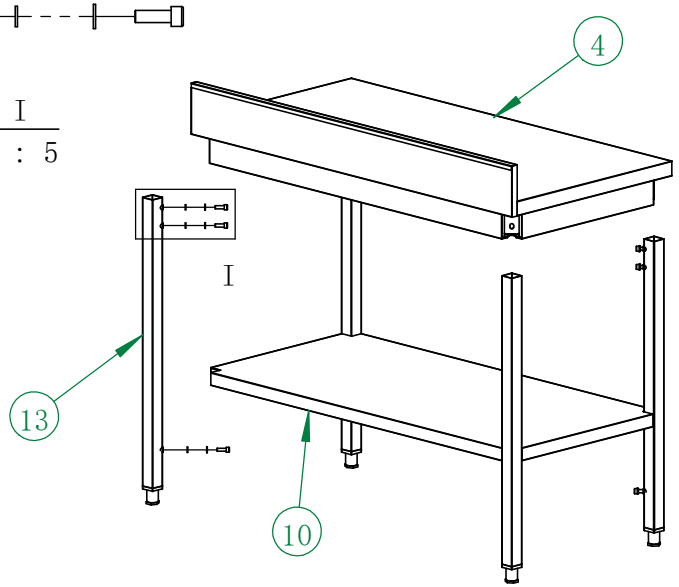

Company			
Item No.	YATS126A	Part name	2-tier Worktable with Backsplash
Material		Weight	
Scale	1:20	Quantity	1
Drawn		Date	
Versions	A0	Page	